5400.42-GA.T054

X

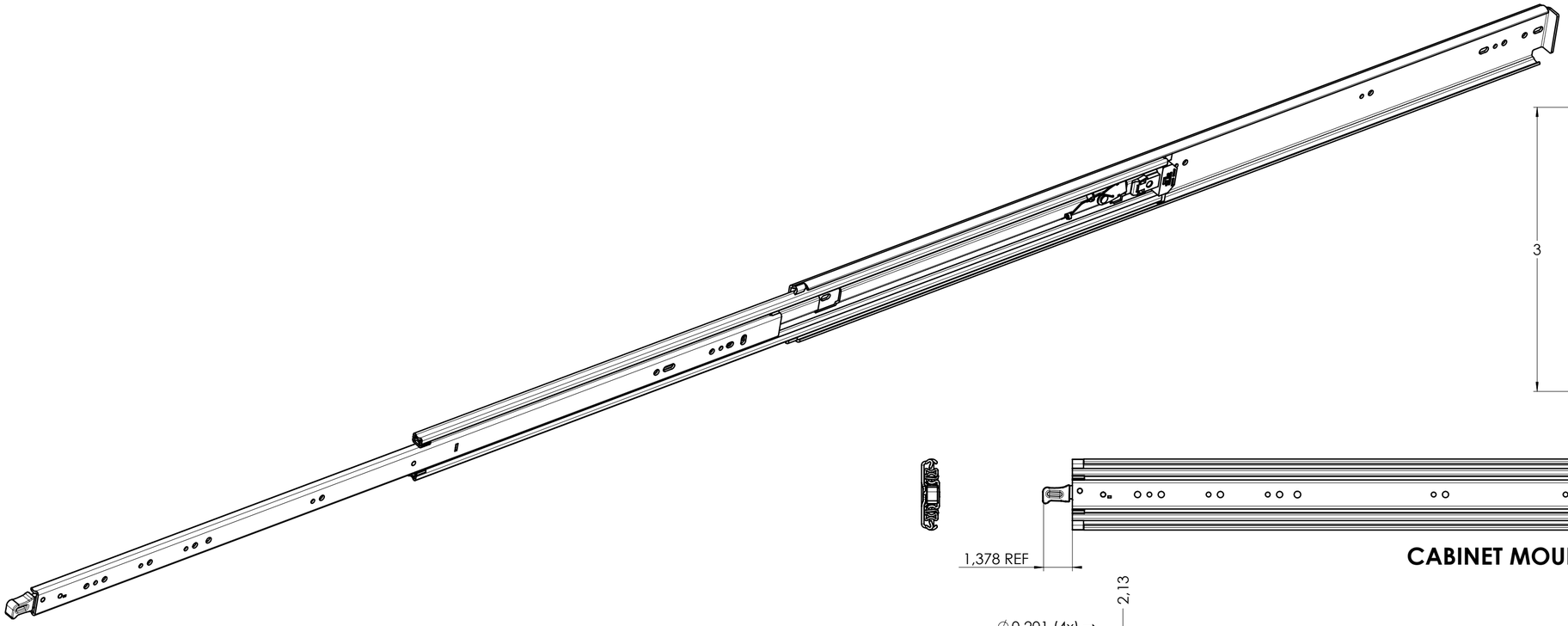

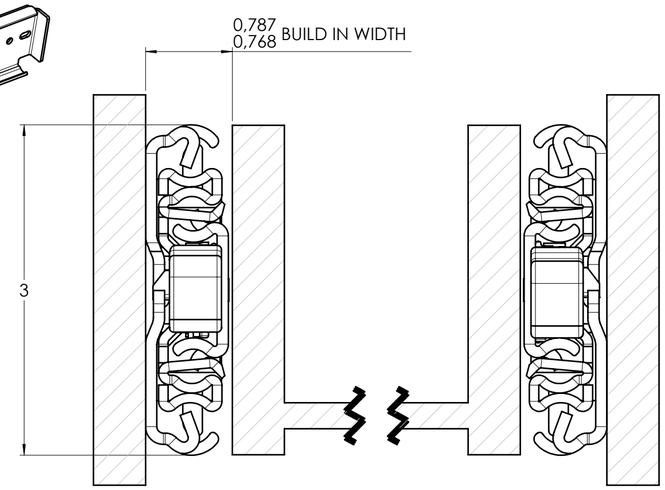

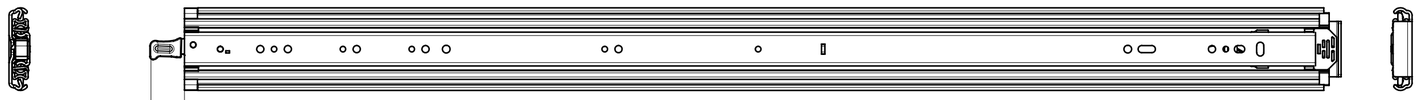

CABINET MOUNTING HOLES

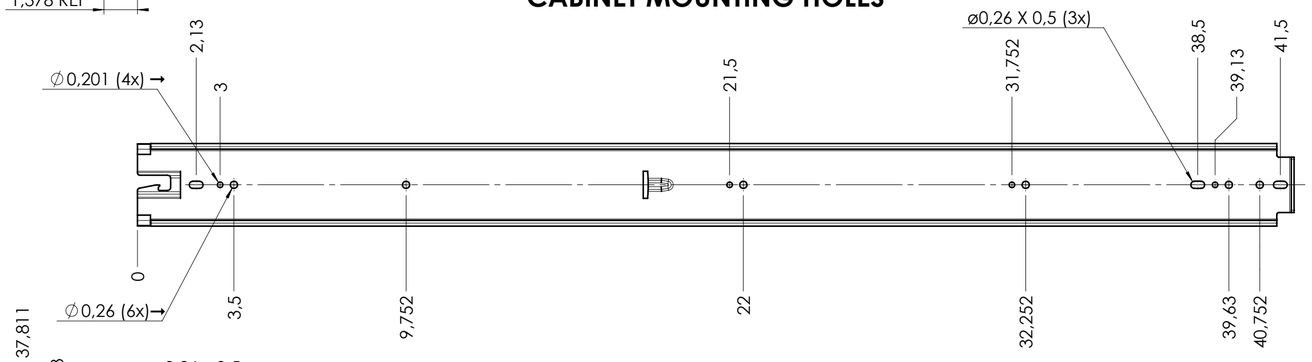

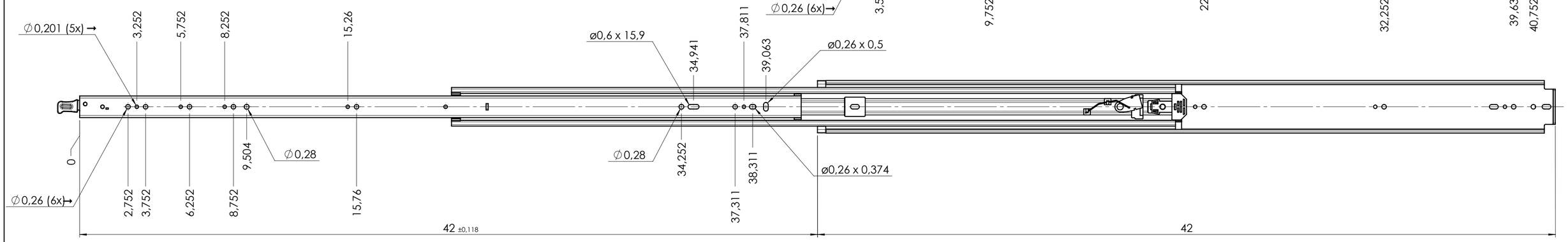

RECOMMENDED HARDWARE:

CABINET- M6 OR 1/4 BUTTON HEAD SCREWS

DRAWER- M6 OR 1/4 BUTTON HEAD SCREWS

general tolerances			DIN ISO 128-30
ISO 2768-m			missing dimensions see 3D
			= theor. intersection

This drawing remains our property and may not be multiplied neither be disclosed to third parties (§§1,3 and 5 from the copyright Act (UrhG))

covered according to DIN ISO 16016

ind.	changes	date	na.
k			
j			
i			
h			
g			
f			
e			
d			
c			
b			
a	0	00-00-0000	0

scale:	surface:	material, semi finished parts:	A2
1:4		STEEL (technical requirements Fulterer)	

	date	name
drawn	27-05-2020	MW
proven	00-00-0000	00

description:
FULL EXTENSION FLAT MOUNT
HEAVY DUTY LOCK-IN/LOCK OUT
NON-DISCONNENCT SLIDE

Fulterer

Fulterer AG & Co KG
A-6890 Lustenau / Austria
Fulterer AG
CH-9430 St. Margrethen

drawing number:
5400.42-GA.T054

replaces version date: