5046.500-GA.C030A

X

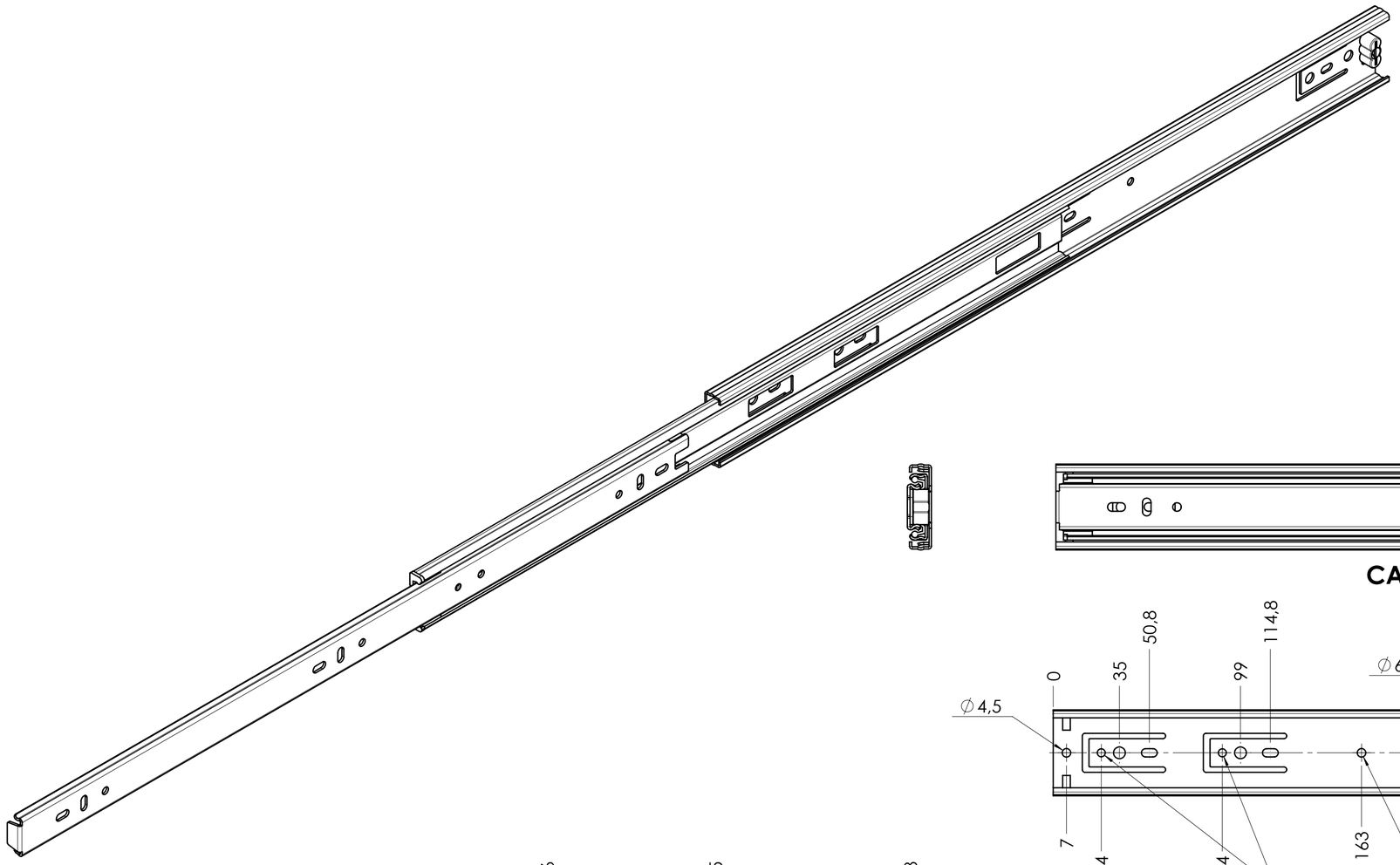

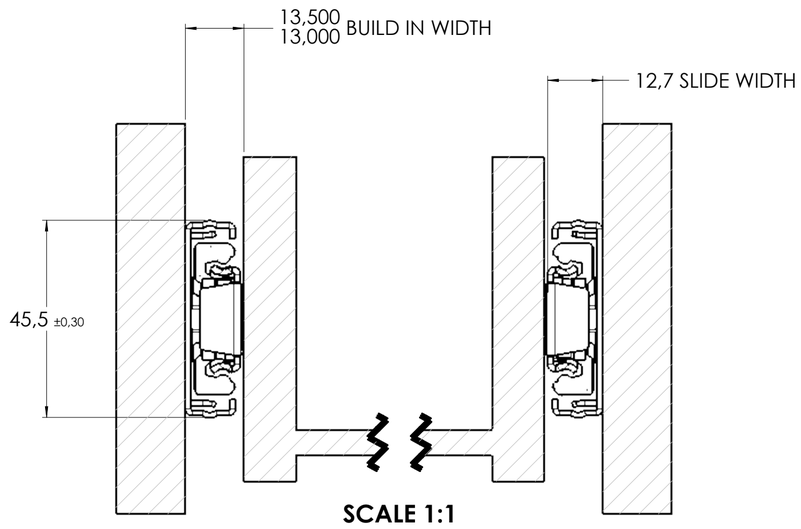

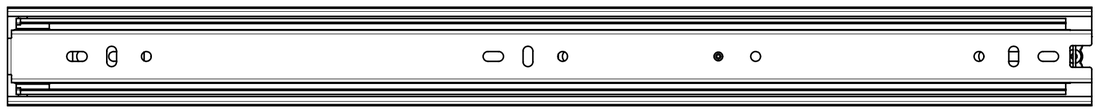

CABINET MOUNTING HOLES

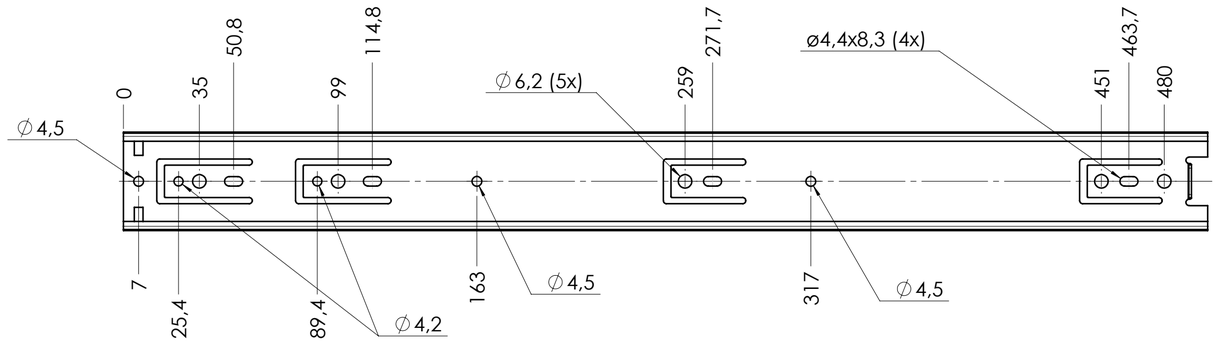

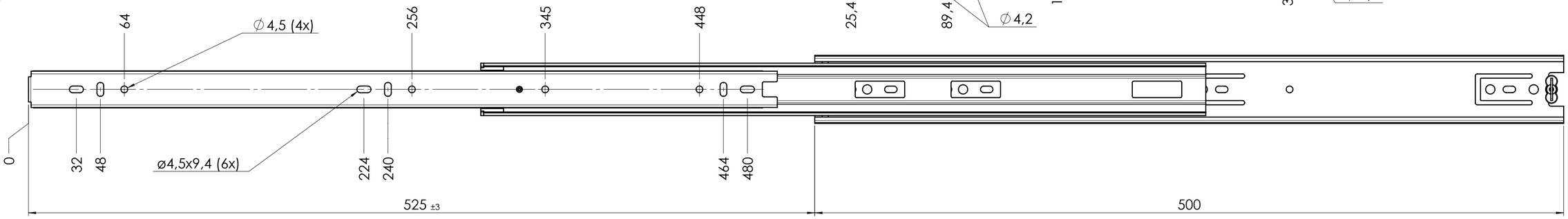

RECOMMENDED HARDWARE:

CABINET- 3.5mm SPAX M4 BUTTON HEAD OR #8 TRUSS HEAD SCREW

DRAWER- 3.5mm SPAX M4 BUTTON HEAD OR #8 TRUSS HEAD SCREW

general tolerances			DIN ISO 128-30 missing dimensions see 3D = theor. intersection
stamping part according Fulterer W18-001	plastic part according DIN ISO 16742 TG4		

This drawing remains our property and may not be multiplied neither be disclosed to third parties (§§1,3 and 5 from the copyright Act (UrhG))

covered according to DIN ISO 16016

ind.	changes	date	na.
k			
j			
i			
h			
g			
f			
e			
d			
c			
b			
a	0	00-00-0000	0

scale: 1:2

surface:

	date	name
drawn	12-04-2022	CS
proven	00-00-0000	00

Fulterer

Fulterer AG & Co KG
A-6890 Lustenau / Austria
Fulterer AG
CH-9430 St. Margrethen

material, semi finished parts: A2
Steel
(technical requirements Fulterer)

description:
SIDE MOUNT OVER EXTENSION DRAWER SLIDE WITH DRAWER DISCONNECT

drawing number:
5046.500-GA.C030A

replaces version date:

Dienstag, 26. April 2022 06:35:20 stefan.corona