5400.14-GA.T054

X

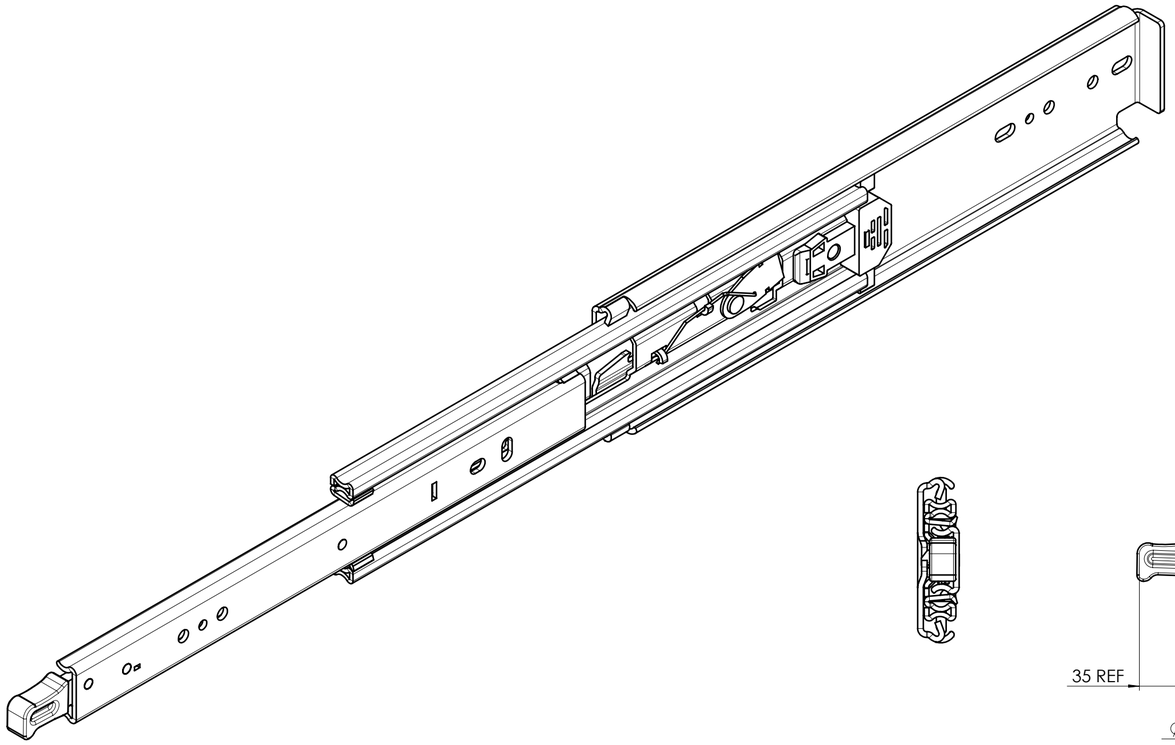

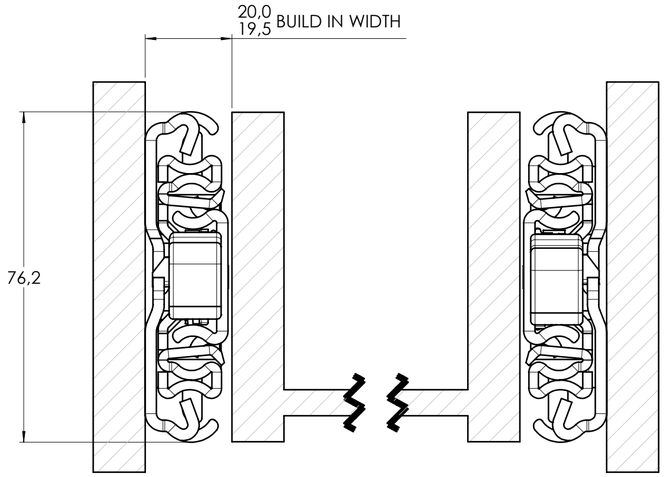

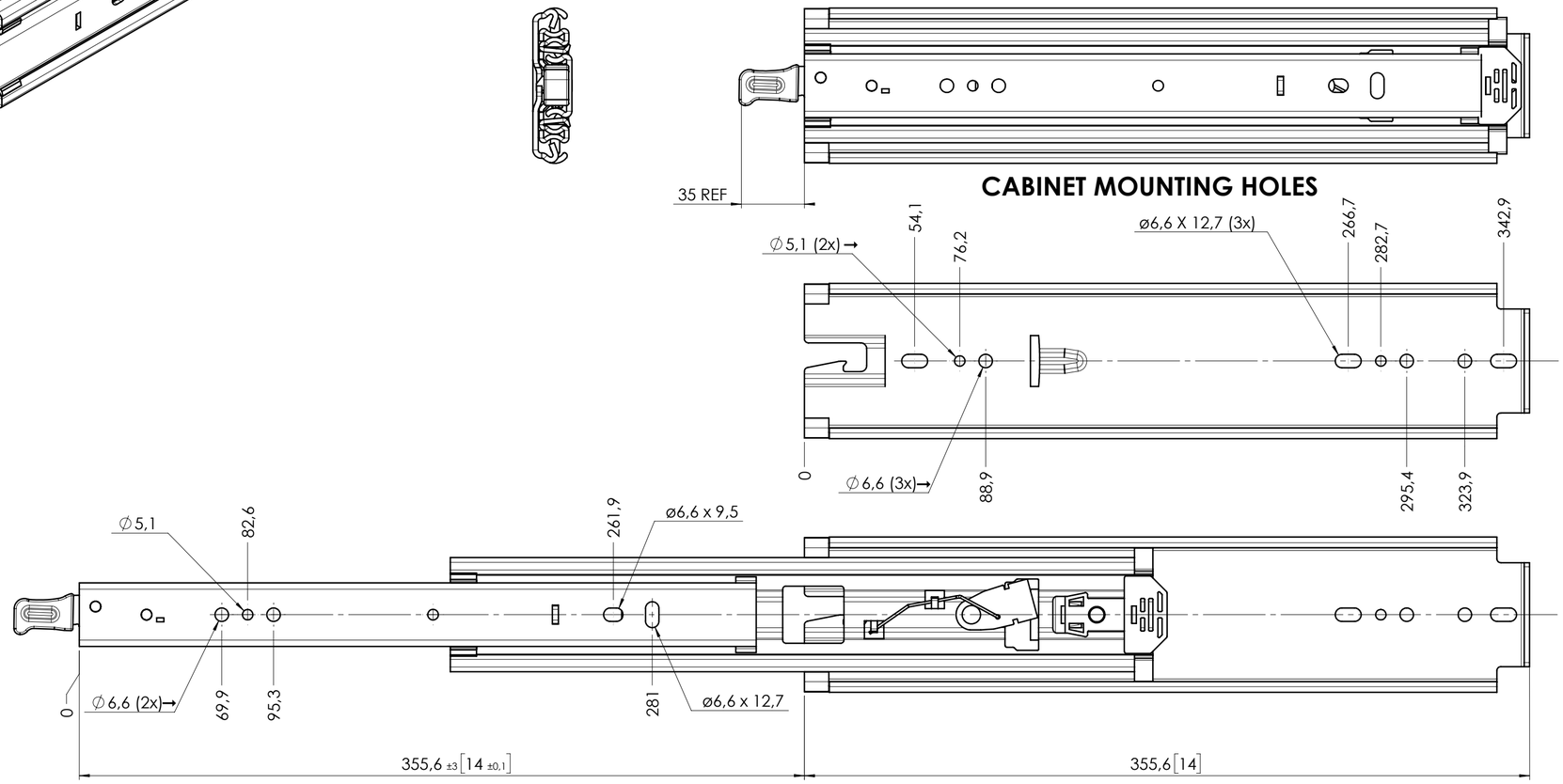

RECOMMENDED HARDWARE:

CABINET- M6 OR 1/4 BUTTON HEAD SCREWS

DRAWER- M6 OR 1/4 BUTTON HEAD SCREWS

general tolerances	DIN ISO 128-30
ISO 2768-m	missing dimensions see 3D = theor. intersection

This drawing remains our property and may not be multiplied neither be disclosed to third parties (§§1,3 and 5 from the copyright Act (UrhG))

covered according to DIN ISO 16016

ind.	changes	date	na.
a	0	00-00-0000	0

scale:	surface:
1:2	

	date	name
drawn	27-05-2020	MW
proven	00-00-0000	00

Fulterer

Fulterer AG & Co KG
A-6890 Lustenau / Austria
Fulterer AG
CH-9430 St. Margrethen

material, semi finished parts: A2
STEEL
(technical requirements Fulterer)

description:
FULL EXTENSION FLAT MOUNT
HEAVY DUTY LOCK-IN/LOCK OUT
NON-DISCONNENCT SLIDE

drawing number:
5400.14-GA.T054

replaces version date:

Dienstag, 5. Januar 2021 11:03:23 stefan.corona